Vinnova Palencia Vanity Collection 703118-NO-WH-NM

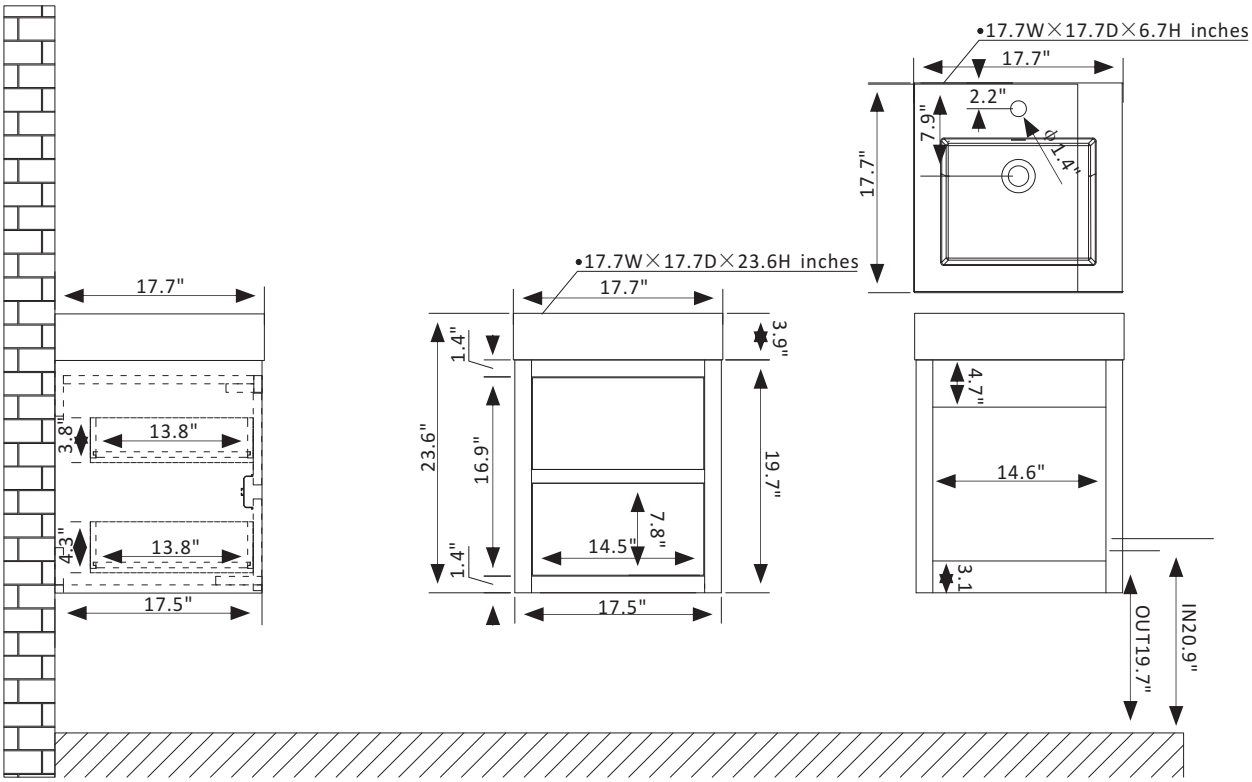

Features

Constructed of eco-friendly PVC board and plywood for superior stability and durability.
Available in North Carolina Oak or North American Mapping Oak finish to complement your décor.
Double soft-close drawers conceal ample storage for toiletries.
Luxury soft-close drawer glide ensures smooth opening and closing.
Brushed Gold hardware finish lends a touch of style and contrast.
Single, white integrated rectangular sink with overflow included.
Pre-drilled and designed for easy plumbing and faucet installation, with back panel included.

* *Does not include faucet, drain assembly, P-trap, or backsplash.*

VINNOVA
FASHION BATHROOM LIFE